USED ON

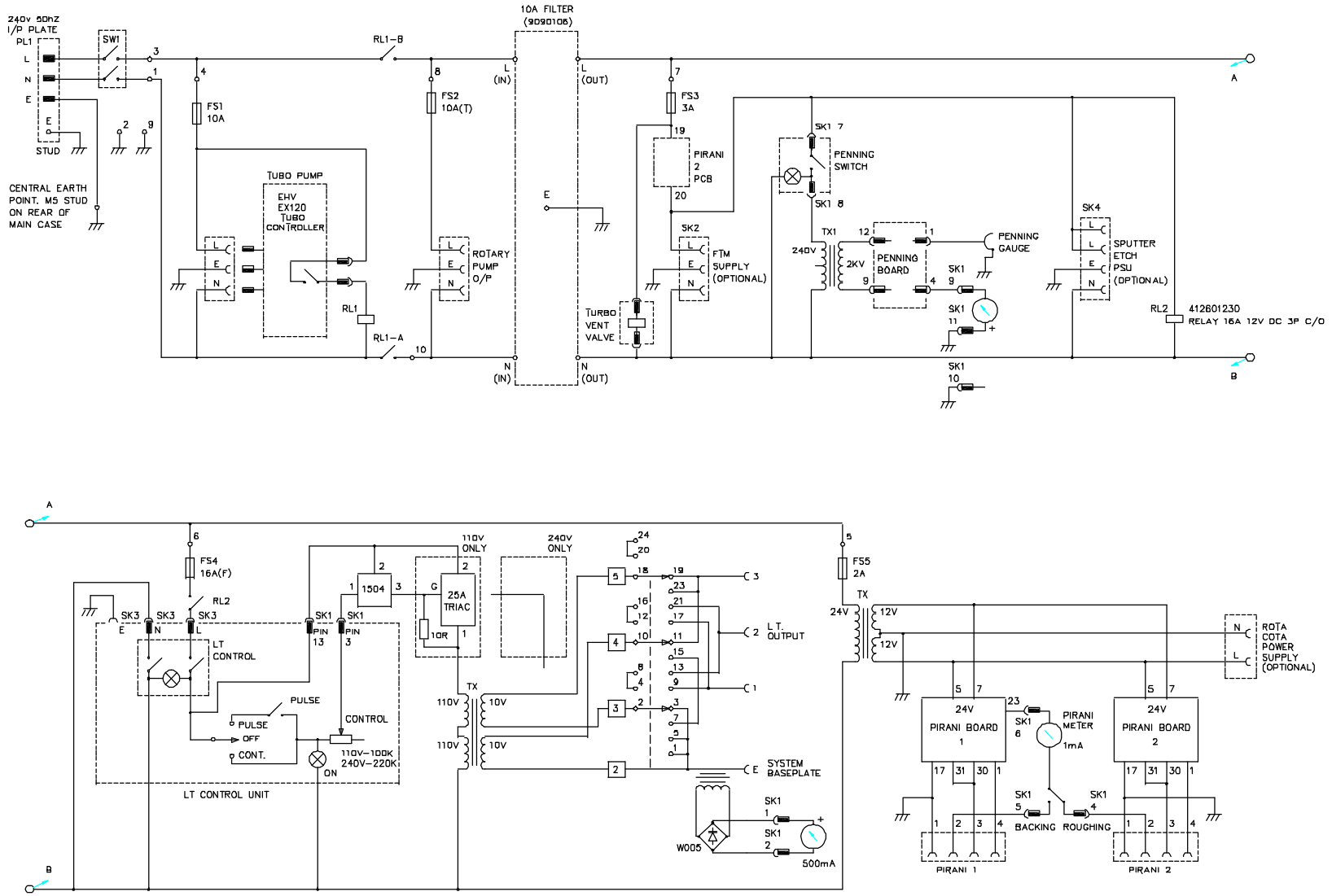

THIS DRAWING AND ANY INFORMATION OR DESCRIPTIVE MATTER SET OUT HEREON ARE THE CONFIDENTIAL AND COPYRIGHT PROPERTY OF THERMO LABSYSTEMS LTD AND MUST NOT BE DISCLOSED, LOANED, OR COPIED IN WHOLE OR PART OR USED FOR MANUFACTURING TENDERING OR FOR ANY OTHER PURPOSE WITHOUT THEIR WRITTEN PERMISSION.

THIS DRAWING HAS BEEN CREATED USING CAD

SHEET SIZE A1

DO NOT SCALE DRAWING | REMOVE ALL BURRS | FOR EXPLANATION OF DIMENSIONS, TOLERANCE, NOTES ETC.SEE BS 308 (MECHANICAL) OR BS 3939 (ELECTRONICS)

UNLESS OTHERWISE STATED DIMENSIONAL TOLERANCE:- 0 ± 1mm, 0.0 ± 0.2mm, 0.00 ± 0.1mm
GEOMETRICAL FORM TO BE WITHIN ABOVE DIMENSIONAL TOLERANCE.
ANGULAR TOLERANCE ± 0° 30'
DRILLED HOLE ± 0.08mm
SURFACE FINISH 1.6µm
DIMENSIONS IN MILLIMETERS

PROJECTION | IF IN DOUBT - ASK
MATERIAL | FINISH

MODIFICATION	DATE	ISS	MODIFICATION	DATE	ISS
			ZB1194	10.10.97	4
			ZB1053	6.11.93	3
			ZB1017	5.3.92	2
			ORIGINAL	13.7.87	1

END | DRN PCJ | PASSED DC | APP'D

VG MICROTECH, UCKFIELD, EAST SUSSEX.

SCALE – | TITLE E6700 CIRCUIT DIAGRAM | DRAWING No. 1 OF 1 67000031